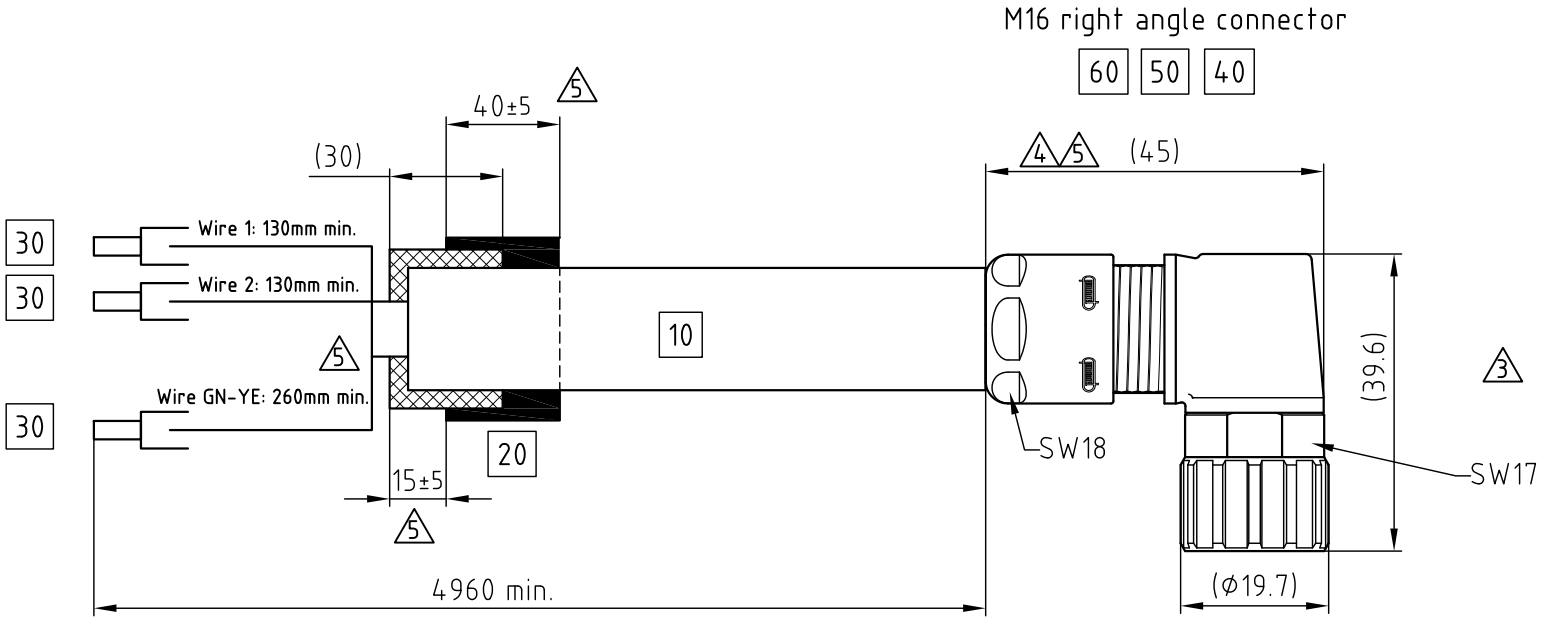

Position	Designation 1	Designation 2	Quantity
10	LAPP, ÖLFLEX 115CY, 3G1, shielded	Length: 5000mm	1.
20	Heat shrink tube	Length: 40mm	1
30	Cable end sleeve 1 mm^2	Isolated, 12mm	3 △2
40	Crimp contacts	7.010.982.002	3
50	M16 Inserts, 3 pole	7.003.983.102	1
60	M16 right angle connector	7.831.400.000	1 △3

TWINTUS-CONNECTOR 3 POLE		
Wire No./Colour	Connector Pin No.	Function
1	1	+UB
2	2	GND
GN-YE	3	Protective Wire

REV	DESCRIPTION	DATE	DRN
5	revise drawing	25.08.16	A.S.
4	Change Length	21.02.14	J.D.
3	Chg. connector P/N+conn.view	24.01.14	J.D.

Nanotec® PLUG & DRIVE

Surface specification DIN ISO 1302	General tolerances DIN ISO 2768- cH	Work piece edge DIN ISO 13715

SIGNATURE		DATE
APVD	X.W.	07.05.12
CHKD		
DRN	J.W.	07.05.12

M16 right angle connector with cable

DWG.NO ZK-TW-3-5M-2